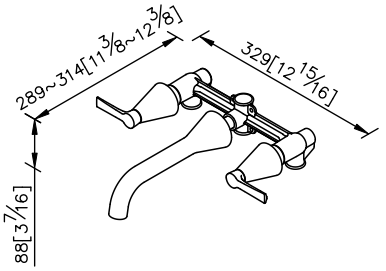
289~314[11 3/8~12 3/8]
329[12 15/16]
88[3 7/16]

unit: mm[inch]

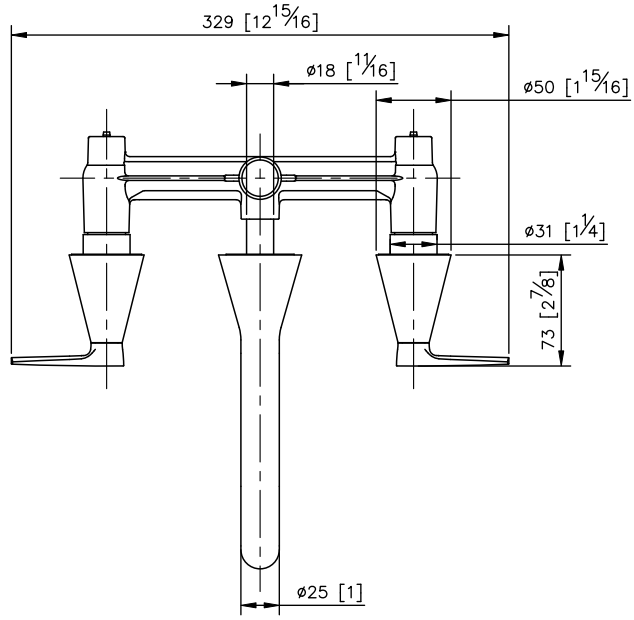
329 [12 15/16]
ø18 [1 1/16]
ø50 [1 15/16]
ø31 [1 1/4]
73 [2 7/8]
ø25 [1]

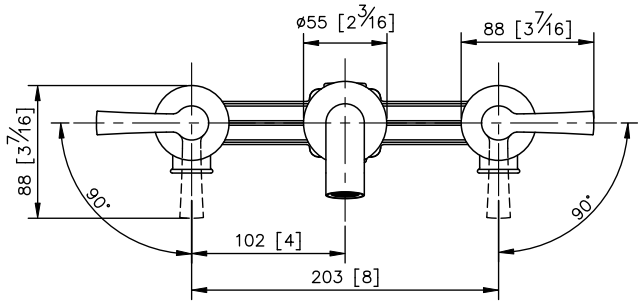
ø55 [2 3/16]
88 [3 7/16]
88 [3 7/16]
90°
90°
102 [4]
203 [8]

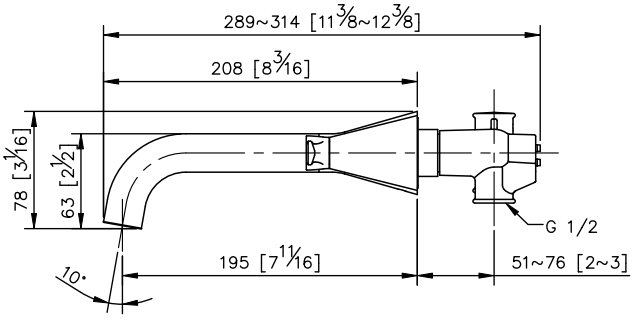
289~314 [11 3/8~12 3/8]
208 [8 3/16]
78 [3 1/16]
63 [2 1/2]
G 1/2
10°
195 [7 11/16]
51~76 [2~3]