Bathtub Faucet
6929-M2-80PB

INTRODUCTION:
Designed main body style as elegance curve, the aesthetics of symmetry exudes a stylish and charming atmosphere. With R angle processed, it soften the right angle of hard steel, and bring more soft and elegant atmosphere to a bathroom space.

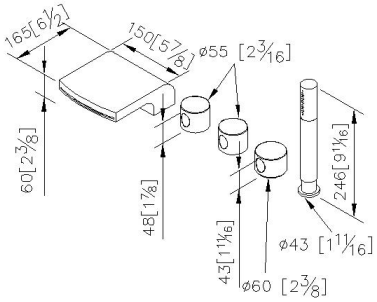

unit: mm[inch]

DESCRIPTION:
1.Ceramic cartridge with brass shell and JAPAN ceramic disc.
2.Inner material of braided hose: SANTOPRENE meets NSF approval.
3.Braided hose can stand 15kg pressure and 120°C heat.
4.Thread of braided hose: FT- 3/4-14 NPSM (for valve)
5.Made of stainless steel SUS304 with polished or brushed finish.

Certifictaion:

Fixing Kits:
1.Mounting Bolt*1
Steel Washer*1
Rubber Washer*1
Nut*1

AWARD: