JUSTIME SINCE 1976

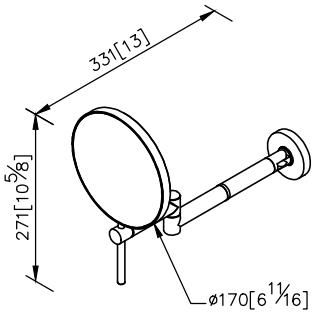

unit: mm[inch]

Magnifying Mirror W/Adjustable Arms

6910-R3-80CP

1.Mirror can be rotated levelly for 360 degrees, and there're optional functions as 2.5X magnifying and normal type for reflection.
2.Mirror shaft could be adjusted horizontally to left and right for 90 degrees, convenient for operation and save the space.
3.Mirror surface could be moved up and down for 180 degrees.
4.Special process treatment prevents the corrosion on the mirror frame.
5.Coordinates with other products in 6910 collection.

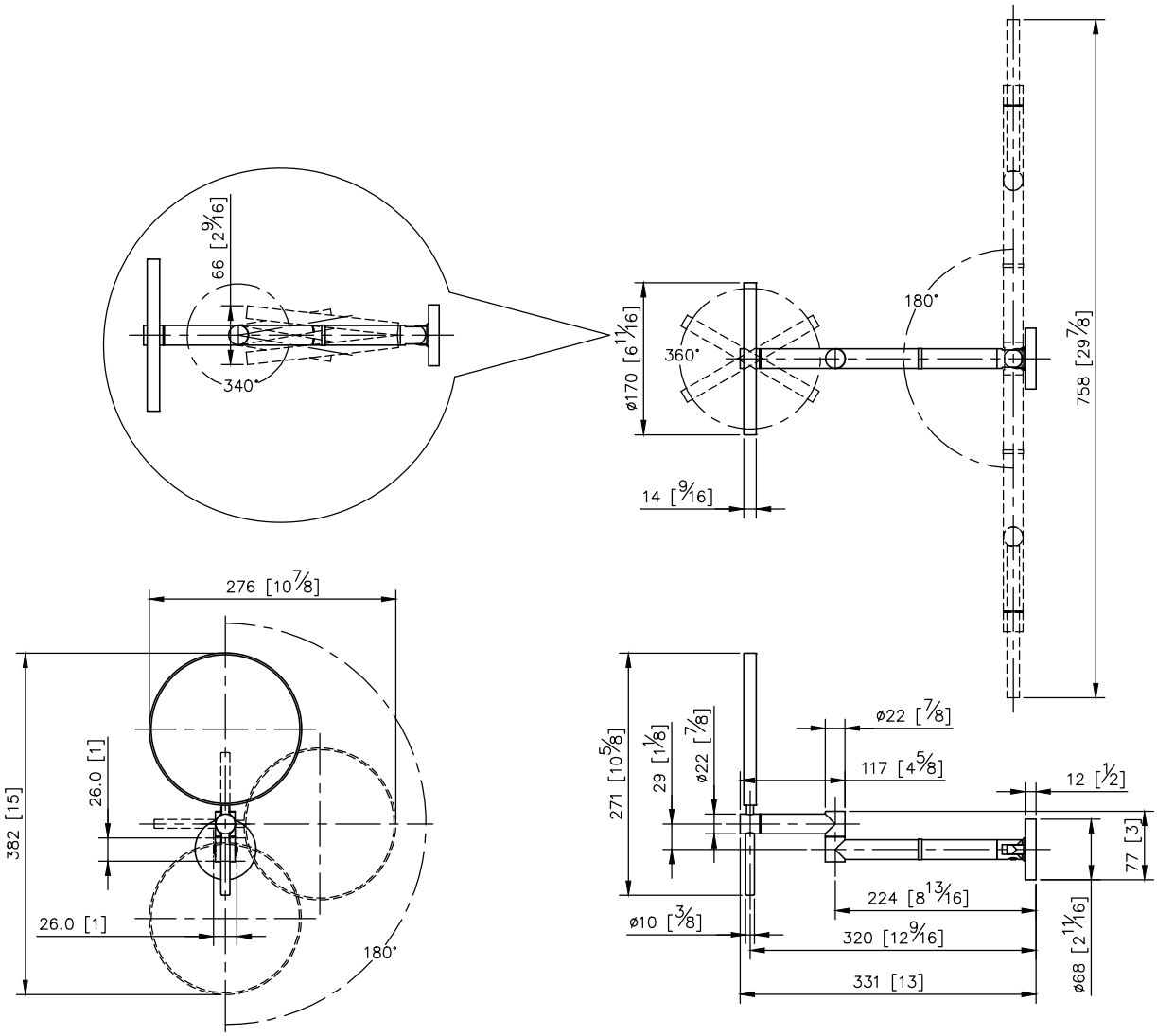
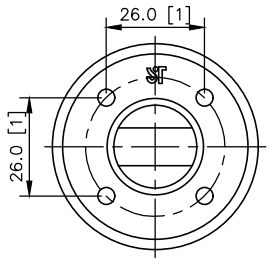
Mounting Template Specification