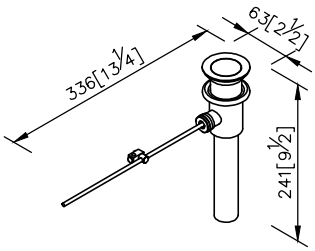

Pop-Up Drain

6502-N1-80CP

1.Brass of forging body meets JIS 3771 standard.
2.Premium metal construction for durability.
3.Justime finishes resist corrosion and tarnish.
4.Finish meets the standard of ASTM-SC2.
5.Material of brass tube meets JIS C2700 standard.
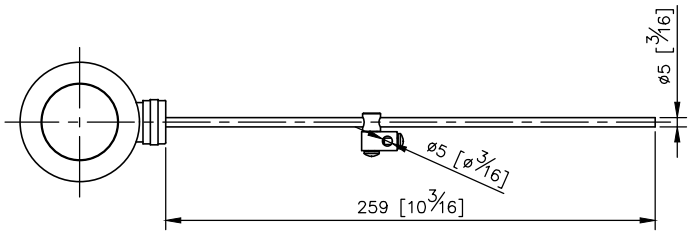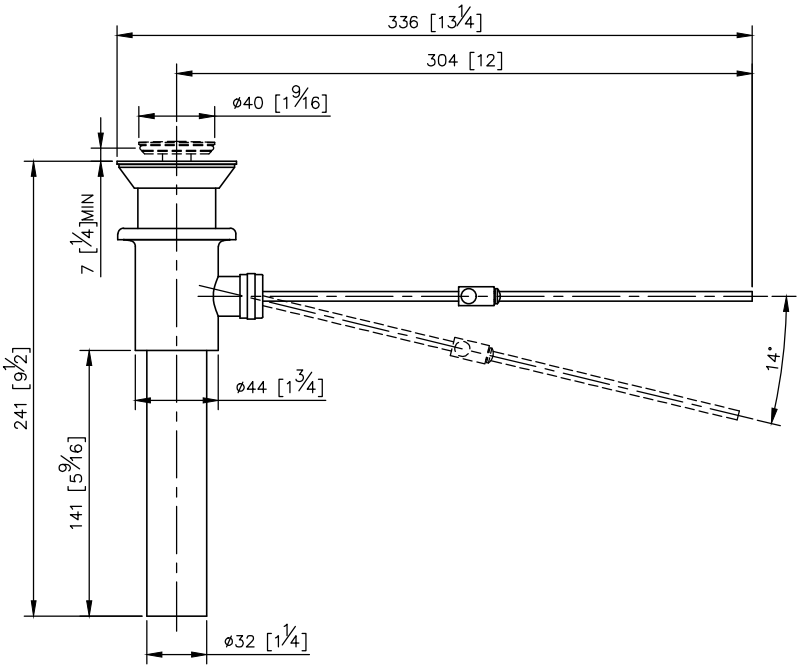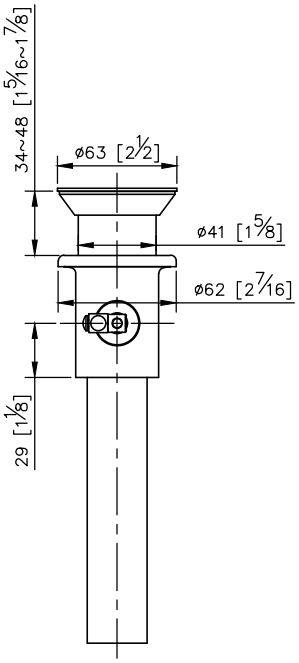
unit: mm[inch]